# *CAPITOL FOUNDRY OF VA, INC.*

**2856 CRUSADER CIRCLE**
**VIRGINIA BEACH, VA 23453**
**PHONE: (757) 427-9431**
**FAX: (757) 427-9308**
**www.capitolfoundry.net**

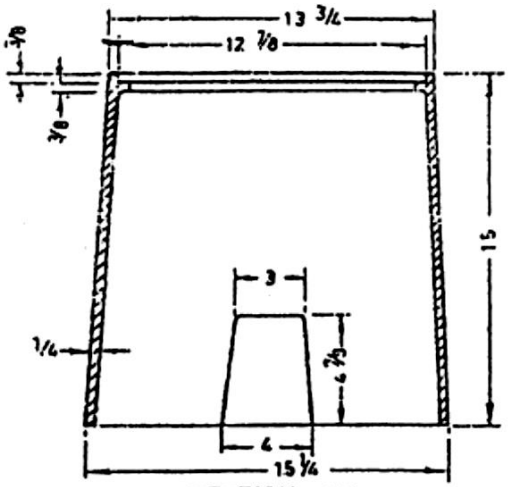


SECTION—X-X.

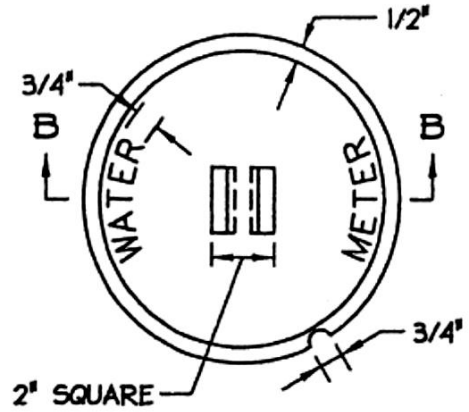


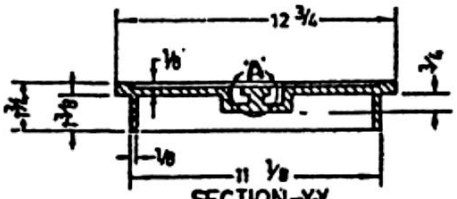


SECTION-Y-Y.

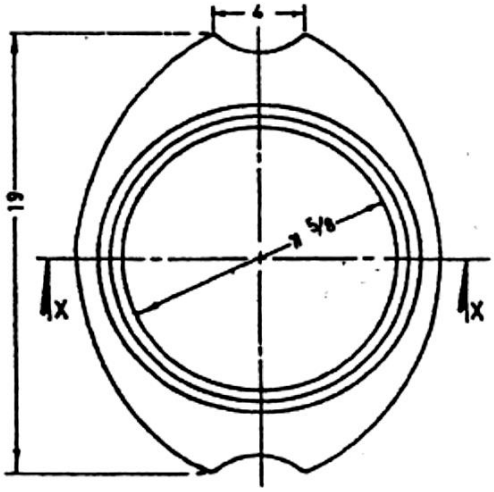


METER BOX.

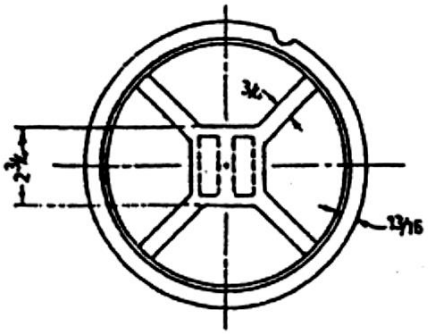

BOTTOM VIEW OF COVER

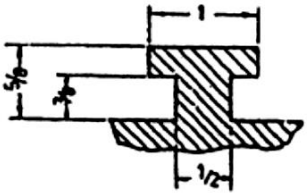


DETAIL—'A'.

**TOWN OF CHRISTIANSBURG METER BOX & LID**

| | |
|---|---|
| **MATERIAL SPEC: ASTM A-48 CLASS 35B** | **ITEM #MBX-3420*C** |